B-525757

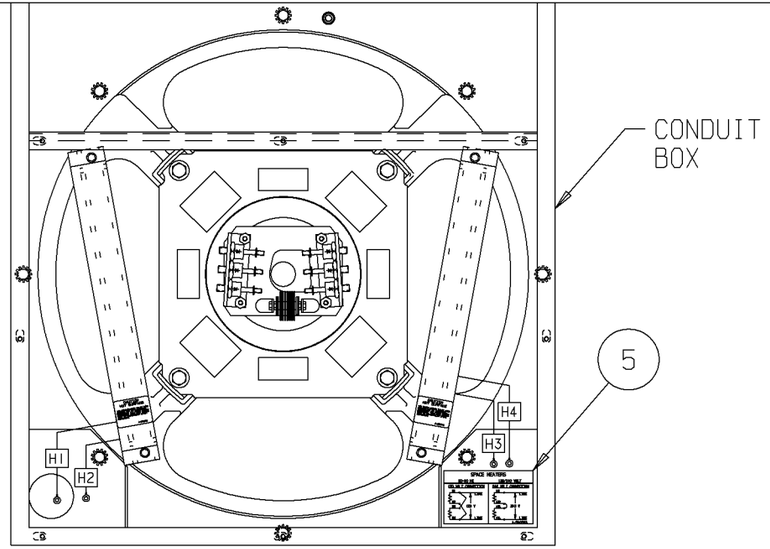

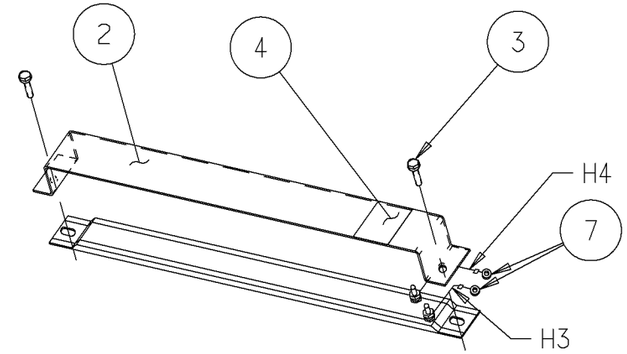

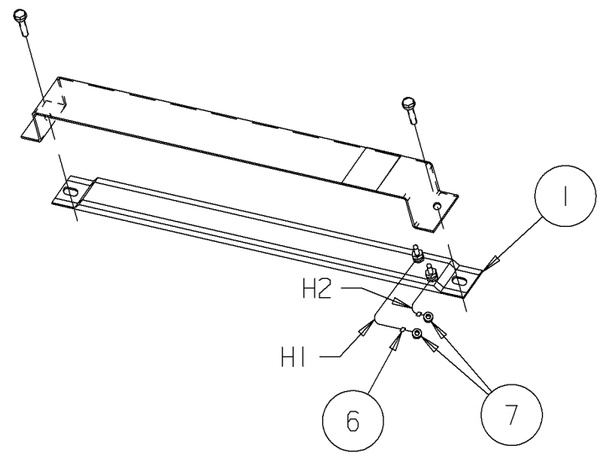

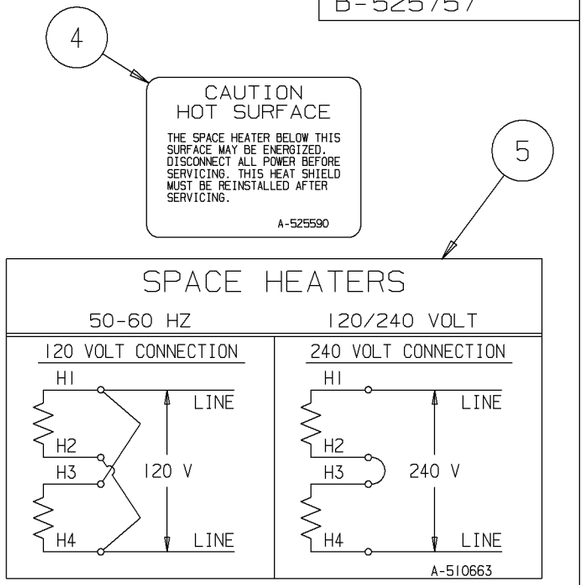

NOTES:

1- ALIGN THE SPACE HEATERS AND GUARDS WITH THE PREDRILLED HOLES IN THE FRONT BRACKET AND MOUNT WITH THE THE SCREWS PROVIDED IN THE SPACE HEATER KIT.

2- APPLY THE SPACE HEATER CONNECTION DECAL (ITEM 5) NEAR THE BOTTOM OF THE CONDUIT BOX IN A VISIBLE LOCATION. (AS SHOWN)

3- WIRE THE SPACE HEATERS TO EITHER 120 VOLTS OR 240 VOLTS ACCORDING TO THE CONNECTION DIAGRAM. INSULATE THE CONNECTIONS.

ITEM	PART NO.	DESCRIPTION	QTY
1	A-21138-33	SPACE HEATER	2
2	A-525855	GUARD	2
3	A-9646-75	SCREW	4
4	A-525590	DECAL - CAUTION	2
5	A-510663	DECAL - CONNECTION	1
6	A-57829B	MARKER	8
7	L6H16W-24EE	LEAD ASSY	4
	A-2039-1	TERMINAL-E	2

TOTAL GENERATOR WATTAGE: 500 WATTS

REV	DATE	CHANGE	NAME
4	9-25-89	SPACE HEATER GUARD WAS A-525692, NOW A-525855 CN 11449	TM
3	1-30-89	CORRECT LINE TO LINE VOLTS FROM 120 TO 240 TO MATCH DECAL A-510663	TM
2	1-20-89	REDRAWN ON CAD	TM

SURFACE ROUGHNESS UNLESS NOTED OTHERWISE

MATL SPEC

FINISH

UNLESS OTHERWISE SPECIFIED DIMENSIONS ARE IN INCHES
TOL ON XX± XXX±.005 XXXX±.0005 ANGLES±

MARATHON ELECTRIC
WAUSAU, WISCONSIN 54401

DRAWN BY	TM	1-20-89
CHKD BY	FG	1-20-89
APPD BY		

PART NAME SPACE HEATER KIT
570 FR. GEN. 120/240 VOLT

DRWG NO B-525757

CADD FILE NO. 525757